# Globe valve series

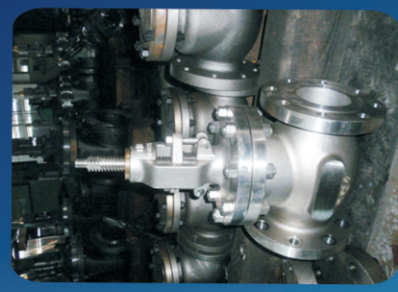
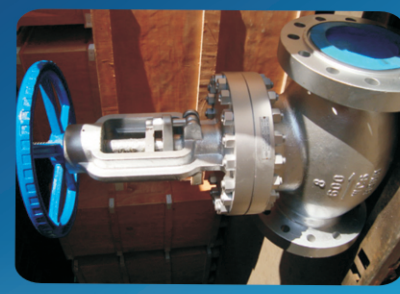

## Design Feature

Design and manufacture: BS1873, ASME B16 34, API 602, DIN 3356
Face–to–Face dimension: ASME B16.10, BS 2080, ISO 5752, JIS B2002, DIN 3202.
Flanged End: ASME B16.5, JIS B2212, B2214, EN 1092–1.
Butt–weld ends: ASME B16.25; Socket weld ends: ASME B16.11; Threaded ends: ANSI B1.20.1.
Shell Wall Thickness: BS 1873, ASME B16.34.
Inspection and Test: API 598, BS EN 12266, ISO 5208, JIS B2003.

## Casting Steel Material

Visual check for cast steel material includes: surface quality, dimension, chemical properties, mechanical performance, non–destructive testing to ensure that the comprehensive performance of raw materials comply with the relevant ASTM, BS, EN, JIS standards.

## Body

The design provides the whole structure of low flow resistance channel structure，enables the body stiffness and strength to bear the nominal piping pressure and stress loading,the valve body wall thickness design complies with BS 1873 or ASME B16.34 with sufficient margin corrosion resistance for the medium.

## Bonnet

Bonnet can be designed with a variety of seal structure of body connection to meet the needs of different operating conditions,the structure can be equipped to connect with Jacketed,flat,spiral wound or metal ring gasket,or pressure–seal valve bonnet for Calss 900/1500/2500.

## Seat

Seat structure can be designed as per user requirements as a whole alloy steel materials pressed—in sealing structure,welding sealing,or screw connection in assembly. The austenitic stainless steel body material can be provided with integral seat.

## Disc

Disc design applies conventional seal structure of rigid cone with plug–oriented，Plunger–seal structure,the pressure balance disc,large–sized valves can be provided with dual plates for easy operation.

## Seat and other seal material

The choice of materials for the seat and other seal material can be as per API standard,or users design and manufacturing requirements.

## Stem

The stem is wholly forged, its T–shape connecting end is of good stiffness and strength to ensure its safe use and reliability.The stem transmission bearing structure applies ACME trapezoidal thread to enable its up and down travel.

## Backseat

All backseats are used on the valve seat seal design,they are replacable and for austenitic stainless steel material it can be integral backseat design.

## Bonnet and Body seal structure

Class 150、300、600：spiral stainless steel and flexible graphite wound gasket Class 600, 900 and above：metal ring gasketChoice for bonnet and body seal can be based on the use of specific operating conditions(medium,medium temperature and pressure)

## Stuffing box

Stuffing box is designed in accordance with relative standards with precise control of surfaoe finish in 32RMS below and its inner verticalIty.

## Packing gland/bushing

Packing gland/bushing are separate structure to ensure packing seal performance.

## Stem Nut

Stem drive nut bearing structure is provided with sophisticated ACME trapezoidal thread. top entry connection design to the yoke,so even the valves are taken off the handwheel at service,the locking device can be ensured to be at original position and working.

## Operator

The valve operators are normally handwheel gearbox,with clear open and close marking. Electric or other operation device can be supplied according to customers requirements.

# Class 150 / JIS10K Bolted bonnet, outside screw & yoke, rising stem, plug type disc

## Features

Design and manufacture: BS 1873, ASME B16.34.
Face–to–Face dimension:ASME B16.10, JIS B2002.
Flanged End: ASME B16.5,JIS B2212, B2214.
B.W.End: ASME B16.25
Shell Wall Thickness: BS 1873, ASME B16.34
Inspection & Test: API 598

## Parts List

| No | Parts | Material |
|---|---|---|
| 1 | Body | ASTM A216 Gr.WCB |
| 2 | Seat ring | ASTM A105+13Cr |
| 3 | Disc | ASTM A105+13Cr |
| 4 | Stem | ASTM A182 F6a |
| 5 | Gasket | 304S.S.Jacketed Graphite |
| 6 | Bonnet | ASTM A216 Gr.WCB |
| 7 | Stud | ASTM A193 Gr.B7 |
| 8 | Nut | ASTM A194 Gr.2H |
| 9 | Backseat | ASTM A276 410 |
| 10 | Packing | Graphite |
| 11 | Gland bolt | ASTM A193 Gr.B7 |
| 12 | Gland nut | ASTM A194 Gr.2H |
| 13 | Pin | C.S |
| 14 | Gland | ASTM A276 410 |
| 15 | Gland flange | ASTM A216 Gr.WCB |
| 16 | Stem nut | Aluminum Bronze |
| 17 | Screw | C.S. |
| 18 | Handwheel | Malleable Iron |
| 19 | Washer | C.S. |
| 20 | Nut | C.S. |
| 21 | Disc cover | ASTM A276 410 |
| 22 | Washer | S.S. |

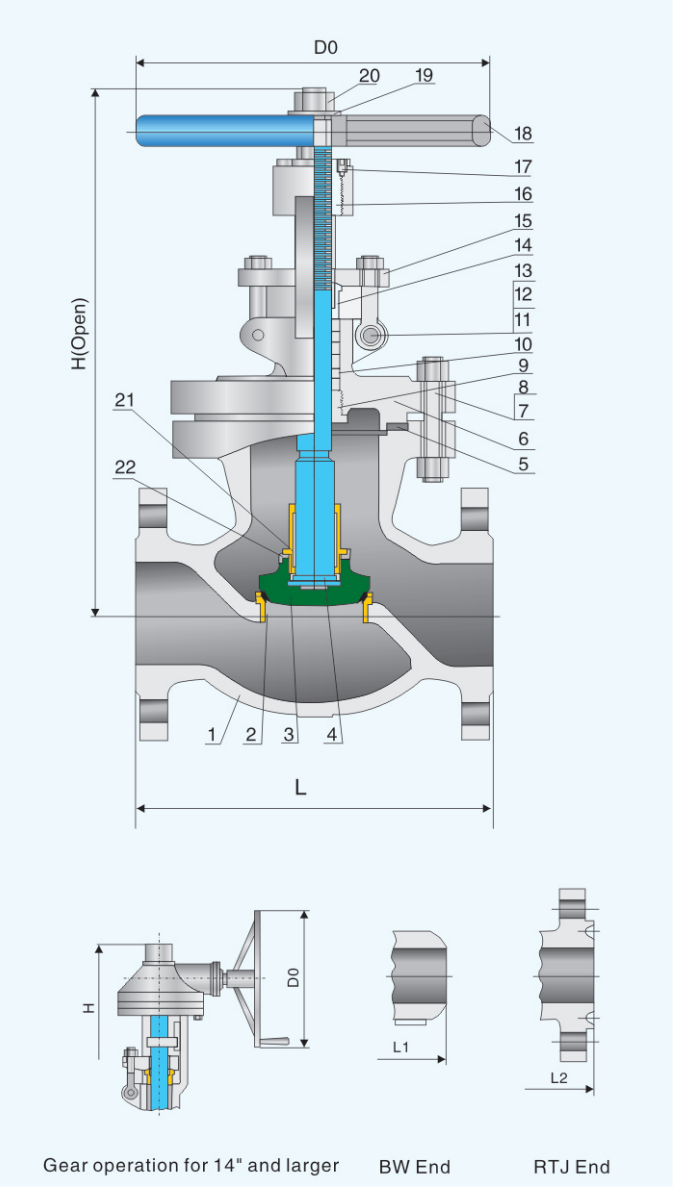


Note: Available LCB, LCC, WC6, C5, WC9, C12, CF8, CF8M,4A, 5A etc for body material. And trim can be customized upon request.

## Dimensions & Weights

| Valve Size | in.<br>mm | 1–1/2<br>40 | 2<br>50 | 2–1/2<br>65 | 3<br>80 | 4<br>100 | 5<br>125 | 6<br>150 | 8<br>200 | 10<br>250 | 12<br>300 | 14<br>350 | 16<br>400 |
|---|---|---|---|---|---|---|---|---|---|---|---|---|---|
| L–L1<br>(RF–BW) | in.<br>mm | 6.5<br>165 | 8<br>203 | 8.5<br>216 | 9.5<br>241 | 11.5<br>292 | 14<br>356 | 16<br>406 | 19.5<br>495 | 24.5<br>622 | 27.5<br>698 | 31<br>787 | 36<br>914 |
| L2<br>(RTJ) | in.<br>mm | 7.0<br>178 | 8.5<br>216 | 9<br>229 | 10<br>254 | 12<br>305 | 14.5<br>369 | 16.5<br>419 | 20<br>508 | 25<br>635 | 28<br>711 | 31.5<br>800 | 36.5<br>927 |
| H<br>(open) | in.<br>mm | 14.25<br>326 | 14.69<br>373 | 15.38<br>390 | 16.56<br>421 | 20.25<br>515 | 21.19<br>538 | 22.31<br>567 | 24.63<br>626 | 28<br>712 | 39<br>990 | 51<br>1295 | 63.75<br>1619 |
| Do | in.<br>mm | 7.88<br>200 | 7.88<br>200 | 9.88<br>250 | 9.88<br>250 | 11.81<br>300 | 11.81<br>300 | 13.75<br>350 | 15.75<br>400 | 17.75<br>450 | 20<br>500 | 24<br>610 | 24<br>610 |
| WT<br>(kg) | RF<br>BW | 19<br>16 | 22<br>19 | 29<br>25 | 42<br>34 | 64<br>49 | 77<br>65 | 105<br>82 | 154<br>131 | 288<br>249 | 507<br>430 | 690<br>600 | 950<br>850 |

# Class 300 / JIS20K Bolted bonnet, outside screw & yoke, rising stem, plug type disc

## Features

Design and manufacture: BS 1873, ASME B16.34.
Face–to–Face dimension: ASME B16.10, JIS B2002.
Flanged End: ASME B16.5, JIS B2212, B2214.
B.W.End: ASME B16.25
Shell Wall Thickness: BS 1873, ASME B16.34
Inspection & Test: API 598

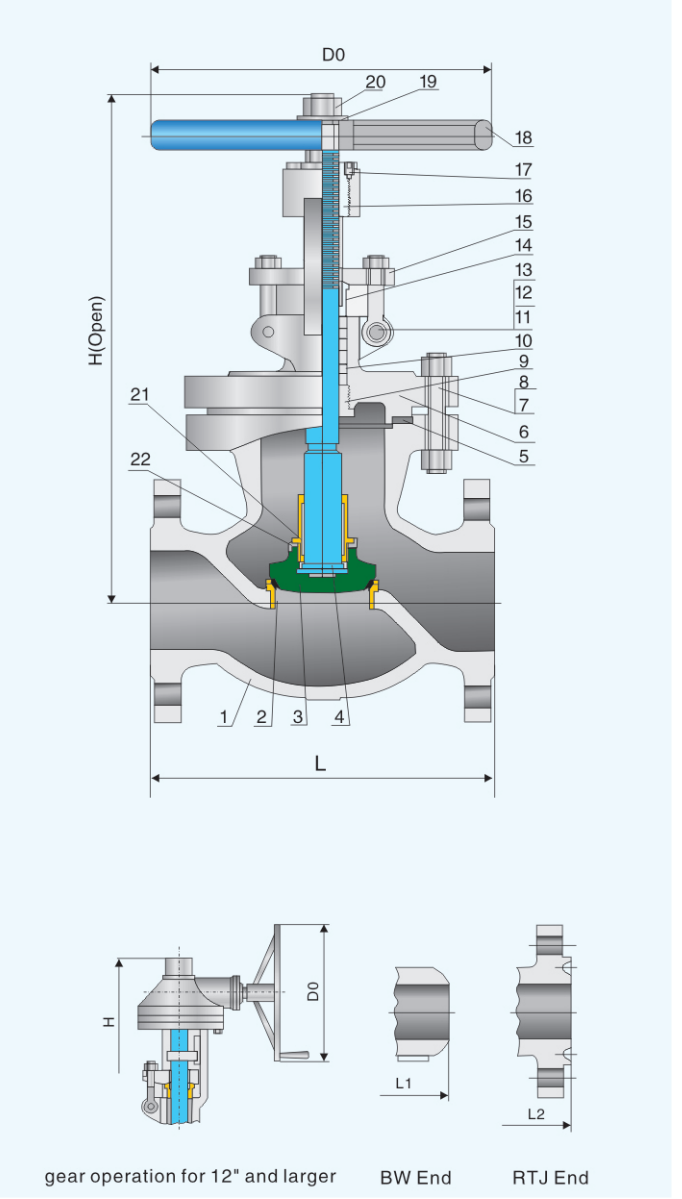


## Parts List

| No | Parts | Material |
|---|---|---|
| 1 | Body | ASTM A216 Gr.WCB |
| 2 | Seat ring | ASTM A105+13Cr |
| 3 | Disc | ASTM A105+13Cr |
| 4 | Stem | ASTM A182 F6a |
| 5 | Gasket | 304S.S.Jacketed Graphite |
| 6 | Bonnet | ASTM A216 Gr.WCB |
| 7 | Stud | ASTM A193 Gr.B7 |
| 8 | Nut | ASTM A194 Gr.2H |
| 9 | Backseat | ASTM A276 410 |
| 10 | Packing | Graphite |
| 11 | Gland bolt | ASTM A193 Gr.B7 |
| 12 | Gland nut | ASTM A194 Gr.2H |
| 13 | Pin | C.S |
| 14 | Gland | ASTM A276 410 |
| 15 | Gland flange | ASTM A216 Gr.WCB |
| 16 | Stem nut | Aluminum Bronze |
| 17 | Screw | C.S. |
| 18 | Handwheel | Malleable Iron |
| 19 | Washer | C.S. |
| 20 | Nut | C.S. |
| 21 | Disc cover | ASTM A276 410 |
| 22 | Washer | S.S. |

Note: Available LCB, LCC, WC6, C5, WC9, C12, CF8, CF8M,4A, 5A etc for body material. And trim can be customized upon request.

## Dimensions & Weights

| Valve Size | in.<br>mm | 1–1/2<br>40 | 2<br>50 | 2–1/2<br>65 | 3<br>80 | 4<br>100 | 5<br>125 | 6<br>150 | 8<br>200 | 10<br>250 | 12<br>300 | 14<br>350 | 16<br>400 |
|---|---|---|---|---|---|---|---|---|---|---|---|---|---|
| L–L1<br>(RF–BW) | in.<br>mm | 9<br>229 | 10.5<br>267 | 11.5<br>292 | 12.5<br>318 | 14<br>356 | 15.75<br>400 | 17.5<br>444 | 22<br>559 | 24.5<br>622 | 28<br>711 | 33<br>838 | 34<br>864 |
| L2<br>(RTJ) | in.<br>mm | 9.5<br>242 | 11.12<br>283 | 12.12<br>308 | 13.12<br>334 | 14.62<br>372 | 16.37<br>416 | 18.12<br>460 | 22.62<br>575 | 25.12<br>638 | 28.62<br>727 | 33.62<br>854 | 34.62<br>880 |
| H<br>(open) | in.<br>mm | 14.17<br>360 | 15.69<br>398 | 17.13<br>436 | 18.19<br>462 | 22.06<br>560 | 24.38<br>620 | 27.31<br>694 | 38.63<br>982 | 44.5<br>1130 | 41.31<br>1049 | 61.25<br>1556 | 67<br>1700 |
| Do | in.<br>mm | 7.88<br>200 | 7.88<br>200 | 9.88<br>250 | 9.88<br>250 | 13.75<br>350 | 15.75<br>400 | 17.75<br>450 | 22.06<br>560 | 34<br>860 | 24<br>610 | 24<br>610 | 24<br>610 |
| WT<br>(kg) | RF<br>BW | 26<br>21 | 31<br>26 | 43<br>38 | 57<br>44 | 86<br>68 | 130<br>110 | 168<br>138 | 280<br>228 | 385<br>329 | 724<br>618 | 1500<br>1350 | 2200<br>2000 |

# Class 600 Bolted bonnet, outside screw & yoke, rising stem, plug type disc

## Features

Design and manufacture: BS 1873, ASME B16.34.
Face–to–Face dimension: ASME B16.10.
Flanged End: ASME B16.5.
B.W.End: ASME B16.25
Shell Wall Thickness: BS 1873, ASME B16.34
Inspection & Test: API 598

## Parts List

| No | Parts | Material |
|---|---|---|
| 1 | Body | ASTM A216 Gr.WCB |
| 2 | Seat ring | ASTM A105+13Cr |
| 3 | Disc | ASTM A105+13Cr |
| 4 | Stem | ASTM A182 F6a |
| 5 | Gasket | 304S.S.Jacketed Graphite |
| 6 | Bonnet | ASTM A216 Gr.WCB |
| 7 | Stud | ASTM A193 Gr.B7 |
| 8 | Nut | ASTM A194 Gr.2H |
| 9 | Backseat | ASTM A276 410 |
| 10 | Packing | Graphite |
| 11 | Gland bolt | ASTM A193 Gr.B7 |
| 12 | Gland nut | ASTM A194 Gr.2H |
| 13 | Pin | C.S |
| 14 | Gland | ASTM A276 410 |
| 15 | Gland flange | ASTM A216 Gr.WCB |
| 16 | Stem nut | Aluminum Bronze |
| 17 | Screw | C.S. |
| 18 | Handwheel | Malleable Iron |
| 19 | Washer | C.S. |
| 20 | Nut | C.S. |
| 21 | Disc cover | ASTM A276 410 |
| 22 | Washer | S.S. |

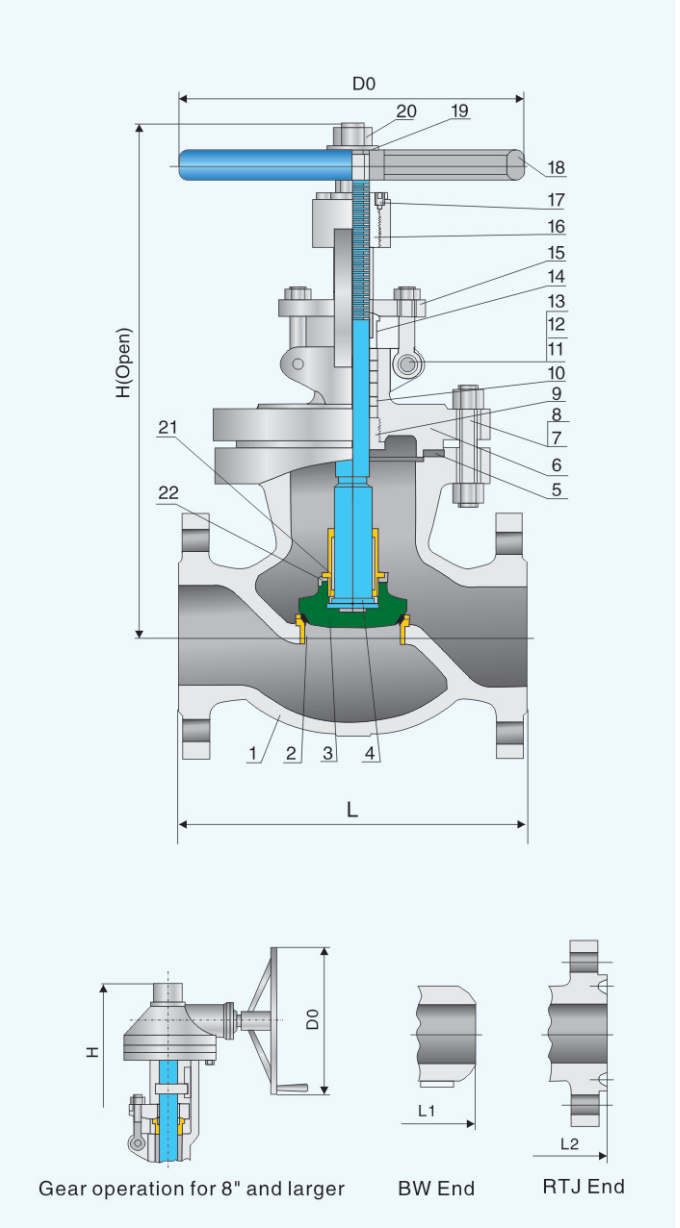


Note: Available LCB, LCC, WC6, C5, WC9, C12, CF8, CF8M,4A, 5A etc for body material. And trim can be customized upon request.

## Dimensions & Weights

| Valve Size | in.<br>mm | 2<br>50 | 2–1/2<br>65 | 3<br>80 | 4<br>100 | 6<br>150 | 8<br>200 | 10<br>250 | 12<br>300 | 14<br>350 | 16<br>400 |
|---|---|---|---|---|---|---|---|---|---|---|---|
| L–L1<br>(RF–BW) | in.<br>mm | 11.5<br>292 | 13<br>330 | 14<br>356 | 17<br>432 | 22<br>559 | 26<br>660 | 31<br>787 | 33<br>838 | 35<br>889 | 39<br>991 |
| L2<br>(RTJ) | in.<br>mm | 11.62<br>295 | 13.12<br>333 | 14.12<br>359 | 17.12<br>435 | 22.12<br>562 | 26.12<br>663 | 31.12<br>790 | 33.12<br>841 | 35.12<br>892 | 39.12<br>994 |
| H<br>(open) | in.<br>mm | 16.75<br>425 | 19.75<br>502 | 20.5<br>521 | 24.38<br>620 | 34.88<br>886 | 36.69<br>932 | 41<br>1040 | 50.38<br>1280 | 70.88<br>1800 | 76<br>1930 |
| Do | in.<br>mm | 9.88<br>250 | 11.81<br>300 | 13.75<br>350 | 17.75<br>450 | 28.38<br>720 | 18.13<br>460 | 24<br>610 | 30<br>760 | 30<br>760 | 30<br>760 |
| WT<br>(kg) | RF<br>BW | 39<br>33 | 58<br>48 | 73<br>61 | 120<br>95 | 327<br>261 | 482<br>385 | 700<br>588 | 900<br>795 | 2700<br>2510 | 3600<br>3350 |

# Class 900 / 1500 / 2500 Bolted bonnet, outside screw & yoke, rising stem, plug type disc

## Features

Design and manufacture: BS 1873, ASME B16.34.
Face–to–Face dimension: ASME B16.10.
Flanged End: ASME B16.5.
B.W.End: ASME B16.25
Shell Wall Thickness: BS 1873, ASME B16.34
Inspection & Test: API 598

## Parts List

| No | Parts | Material |
|---|---|---|
| 1 | Body | ASTM A216 Gr.WCB |
| 2 | Seat ring | ASTM A105+STL |
| 3 | Disc | ASTM A105+13Cr |
| 4 | Stem | ASTM A182 F6a |
| 5 | Disc cover | ASTM A276 410 |
| 6 | Stud | ASTM A193 Gr B7 |
| 7 | Nut | ASTM A194 Gr.2H |
| 8 | Gasket | Soft iron |
| 9 | Backseat | ASTM A276 410 |
| 10 | Bonnet | ASTM A216 Gr.WCB |
| 11 | Packing | Graphite |
| 12 | Gland | ASTM A276 410 |
| 13 | Gland flange | ASTM A216 Gr.WCB |
| 14 | Gland bolt | ASTM A193 Gr B7 |
| 15 | Gland nut | ASTM A194 Gr.2H |
| 16 | Pin | C.S. |
| 17 | Bearing | Assembly |
| 18 | Lubricator | Assembly |
| 19 | Stem nut | Aluminum Bronze |
| 20 | Hand wheel | Malleable Iron |
| 21 | H.W.lock nut | C.S. |
| 22 | Screw | C.S. |
| 23 | Retaining nut | C.S. |
| 24 | Bolt | C.S. |
| 25 | Guide block | C.S. |

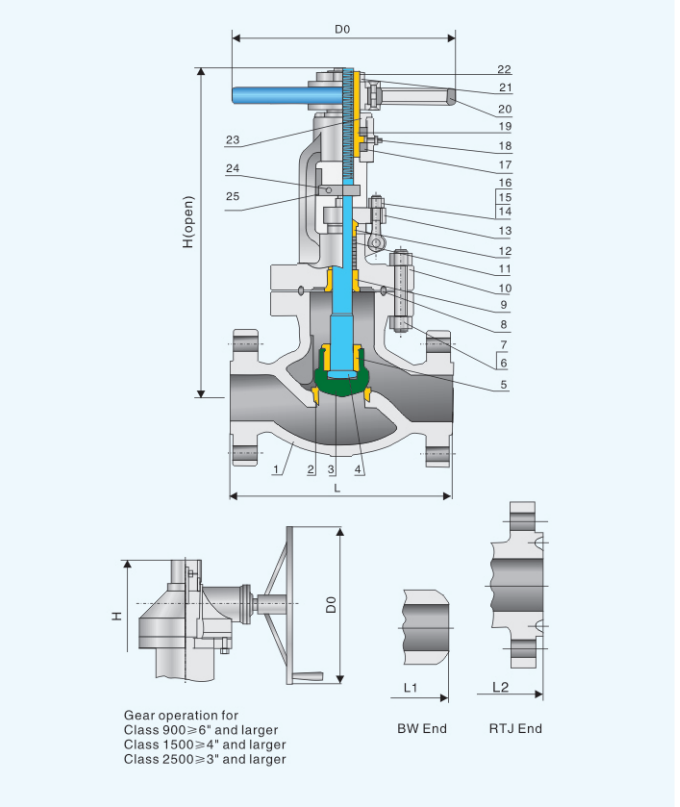


Note: Available LCB, LCC, WC6, C5, WC9, C12, CF8, CF8M,4A, 5A etc for body material. And trim can be customized upon request.

## Dimensions & Weights

| | ValveSize | in. / mm | 2 | 2–1/2 | 3 | 4 | 6 | 8 | 10 |
|---|---|---|---|---|---|---|---|---|---|
| Class900 | | mm | 50 | 65 | 80 | 100 | 150 | 200 | 250 |
| | L–L1 (RF–BW) | in. | 14.5 | 16.5 | 15 | 18 | 24 | 29 | 33 |
| | | mm | 368 | 419 | 381 | 457 | 610 | 737 | 838 |
| | L2 (RTJ) | in. | 14.62 | 16.62 | 15.12 | 18.12 | 24.12 | 29.12 | 33.12 |
| | | mm | 371 | 422 | 384 | 460 | 613 | 740 | 841 |
| | H (open) | in. | 9.44 | 10.25 | 10.25 | 12.63 | 15 | 20.88 | 27.17 |
| | | mm | 240 | 260 | 260 | 320 | 382 | 530 | 690 |
| | Do | in. | 13.75 | 15.75 | 17.75 | 22.06 | 24 | 24 | 24 |
| | | mm | 350 | 400 | 450 | 560 | 610 | 610 | 610 |
| | WT (kg) | RF | 100 | 118 | 131 | 218 | 452 | 710 | 2050 |
| | | BW | 75 | 94 | 105 | 185 | 340 | 630 | 1870 |
| Class1500 | L–L1 (RF–BW) | in. | 14.5 | 16.5 | 18.5 | 21.5 | 27.75 | 32.75 | -- |
| | | mm | 368 | 419 | 470 | 546 | 705 | 832 | |
| | L2 (RTJ) | in. | 14.62 | 16.62 | 18.62 | 21.62 | 28 | 33.13 | -- |
| | | mm | 371 | 422 | 473 | 549 | 711 | 842 | |
| | H (open) | in. | 23.31 | 26 | 27.25 | 35.69 | 40 | 4506 | -- |
| | | mm | 592 | 660 | 692 | 907 | 1015 | 1145 | |
| | Do | in. | 13.75 | 15.75 | 17.75 | 22.06 | 24 | 24 | -- |
| | | mm | 350 | 400 | 450 | 560 | 610 | 610 | |
| | WT (kg) | RF | 112 | 141 | 228 | 336 | 822 | 990 | -- |
| | | BW | 84 | 115 | 183 | 277 | 715 | 830 | |
| Class2500 | L–L1 (RF–BW) | in. | 17.75 | 20 | 22.75 | 26.5 | 36 | -- | -- |
| | | mm | 451 | 508 | 578 | 673 | 914 | | |
| | L2 (RTJ) | in. | 17.87 | 20.25 | 23 | 26.88 | 36.5 | -- | -- |
| | | mm | 454 | 514 | 584 | 683 | 927 | | |
| | H ( open) | in. | 27.25 | 29.5 | 31.5 | 47.25 | 75 | -- | -- |
| | | mm | 692 | 750 | 800 | 1200 | 1905 | | |
| | Do | in. | 15.75 | 19.69 | 24 | 30 | 30 | -- | -- |
| | | mm | 400 | 500 | 610 | 760 | 750 | | |
| | WT (kg) | RF | 182 | 290 | 340 | 820 | 2300 | -- | -- |
| | | BW | 153 | 230 | 272 | 670 | 2000 | | |

# Class 900 / 1500 / 2500 Pressure seal bonnet, piston type disc

## Features

Design and manufacture: BS 1873, ASME B16.34.
Face–to–Face dimension: ASME B16.10
Flanged End: ASME B16.5
B.W.End: ASME B16.25
Shell Wall Thickness: BS 1873, ASME B16.34
Inspection & Test: API 598

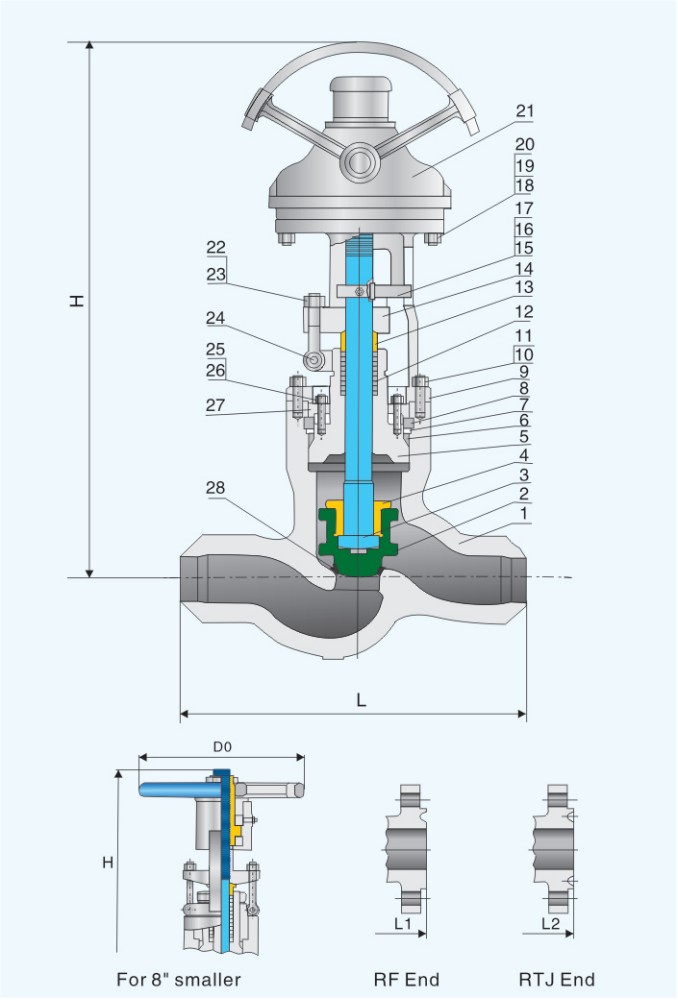


## Parts List

| No | Parts | Material |
|---|---|---|
| 1 | Body | ASTM A216 Gr.WCB |
| 2 | Disc | ASTM A105+13Cr |
| 3 | Stem | ASTM A182 F6a |
| 4 | Disc nut | ASTM A276 410 |
| 5 | Bonnet | ASTM A216 Gr.WCB |
| 6 | Sealing ring | ASTM A182 F304 |
| 7 | Spacer ring | ASTM A182 F6a |
| 8 | Sealing ring | ASTM A182 F6a |
| 9 | Yoke | ASTM A216 Gr.WCB |
| 10 | Bolt | ASTM A193 Gr.B7 |
| 11 | Nut | ASTM A194 Gr.2H |
| 12 | Packing | Graphite |
| 13 | Gland | ASTM A276 410 |
| 14 | Gland flange | ASTM A216 Gr.WCB |
| 15 | Pin | C.S. |
| 16 | Bolt | C.S. |
| 17 | Stem guide collar | C.S. |
| 18 | Bolt | C.S. |
| 19 | Nut | C.S. |
| 20 | Washer | C.S. |
| 21 | Gear box | Assembly |
| 22 | Gland bolt | ASTM A193 Gr.B7 |
| 23 | Gland nut | ASTM A194 Gr.2H |
| 24 | Pin | ASTM A276 410 |
| 25 | Stud | ASTM A193 Gr.B7 |
| 26 | Nut | ASTM A194 Gr.2H |
| 27 | Supporting plate | ASTM A105 |
| 28 | Seat surface | STL No.6 |

Note: Available LCB, LCC, WC6, C5, WC9, C12, CF8, CF8M,4A, 5A etc for body material. And trim can be customized upon request.

## Dimensions & Weights

| | | | | | | | | |
|---|---|---|---|---|---|---|---|---|
| Class 900 | Valve Size | in.<br>mm | 2<br>50 | 2–1/2<br>65 | 3<br>80 | 4<br>100 | 6<br>150 | 8<br>200 |
| | (RF–BW)(L–L1) | in.<br>mm | 14.5<br>368 | 16.5<br>419 | 15<br>381 | 18<br>457 | 24<br>610 | 29<br>737 |
| | RTJ ( L2 ) | in.<br>mm | 14.62<br>371 | 16.62<br>422 | 15.12<br>384 | 18.12<br>460 | 24.12<br>613 | 29.12<br>740 |
| | Open ( H ) | in.<br>mm | 21.65<br>550 | 23.82<br>605 | 26.70<br>678 | 31.42<br>798 | 36.61<br>930 | 49.61<br>1260 |
| | Do | in.<br>mm | 13.78<br>350 | 13.78<br>350 | 15.75<br>400 | 17.72<br>450 | 18.03<br>458 | 24<br>610 |
| | WT (kg) | RF—BW | 76<br>64 | 106<br>89 | 100<br>85 | 140<br>126 | 388<br>353 | 958<br>866 |
| Class 1500 | Valve Size | in.<br>mm | 14.5<br>368 | 16.5<br>419 | 18.5<br>470 | 21.5<br>546 | 27.75<br>705 | 32.75<br>832 |
| | (RF–BW)(L–L1) | in.<br>mm | 14.62<br>371 | 16.62<br>422 | 18.62<br>473 | 21.62<br>549 | 28<br>711 | 33.13<br>842 |
| | RTJ ( L2 ) | in.<br>mm | 21.65<br>550 | 23.82<br>605 | 34.10<br>866 | 37.64<br>956 | 49.61<br>1260 | 49.72<br>1263 |
| | Do | in.<br>mm | 15.75<br>400 | 15.75<br>400 | 17.72<br>450 | 22.05<br>560 | 24<br>610 | 24<br>610 |
| | WT (kg) | RF—BW | 83<br>75 | 108<br>99 | 132<br>120 | 228<br>207 | 658<br>593 | 1588<br>1438 |
| Class 2500 | Valve Size | in.<br>mm | 17.75<br>451 | 20<br>508 | 22.75<br>578 | 26.50<br>673 | 36<br>914 | 40.25<br>1022 |
| | (RF–BW)(L–L1) | in.<br>mm | 17.87<br>454 | 20.25<br>514 | 23<br>584 | 26.88<br>683 | 36.50<br>927 | 40.87<br>1038 |
| | RTJ ( L2 ) | in.<br>mm | 22.05<br>560 | 28.35<br>720 | 29.72<br>755 | 48.43<br>1230 | 70.51<br>1791 | 82.13<br>2086 |
| | Do | in.<br>mm | 15.75<br>400 | 17.72<br>450 | 22.05<br>560 | 12.2<br>310 | 24<br>610 | 30<br>760 |
| | WT(kg) | RF—BW | 138<br>98 | 166<br>116 | 245<br>178 | 618<br>436 | 1498<br>1146 | 3198<br>2592 |

# Class 900 / 1500 / 2500 Pressure seal bonnet, piston type disc

## Features

Design and manufacture:
BS 1873 and ASME B16.34
Stem indicator
Disc hard–surfaced
Integral hard–surfaced seats
Guide ribs
Pressure seal gasket
B.W.End to ASME B 16.25
Low pressure drops

## Y–Pattern Stop Valves

Y–Pattern Stop Valves are available in stop configurations for critical high temperature & high pressure services, Many design features incorporated into stop valves–drop tight shut–off,low pressure drop,piping flexibility–are also included in stop valves.In addition, an Equalizer pipe is provided to help achieve full disk lift as well as reduce wear–producing turbulence.

## Parts list

| No | Parts | Material |
|---|---|---|
| 1 | Body | ASTM A216 Gr.WCB |
| 2 | Seat surface | Stellite |
| 3 | Disc | ASTM A105+13Cr |
| 4 | Split ring | ASTM A182 F6a |
| 5 | Bolt | S.S. |
| 6 | Stem | ASTM A182 F6a |
| 7 | Disc guide | ASTM A276 410 |
| 8 | Bonnet | ASTM A216 Gr.WCB |
| 9 | Sealing ring | ASTM A182 F304 |
| 10 | Spacer ring | ASTM A182 F6a |
| 11 | Sealing ring | ASTM A182 F6a |
| 12 | Supporting plate | ASTM A 105 |
| 13 | Yoke lock ring | ASTM A216 Gr.WCB |
| 14 | Bolt | ASTM A193 Gr.B7 |
| 15 | Nut | ASTM A194 Gr.2H |
| 16 | Gland | ASTM A276 410 |
| 17 | Gland flange | ASTM A216 Gr.WCB |
| 18 | Stem guide collar | C.S. |
| 19 | Yoke | ASTM A216 Gr.WCB |
| 20 | Bushing | Assemly |
| 21 | Stem nut | Aluminum Bronze |
| 22 | Gear box | Assemly |
| 23 | Bolt | C.S. |
| 24 | Washer | C.S. |
| 25 | Pin | C.S. |
| 26 | Bolt | C.S. |
| 27 | Stud | ASTM A193 Gr.B7 |
| 28 | Nut | ASTM A194 Gr.2H |
| 29 | Pin | C.S. |
| 30 | Packing | Graphite |
| 31 | Lock ring bolt | ASTM A193 Gr.B7 |
| 32 | Lock ring nut | ASTM A194 Gr.2H |

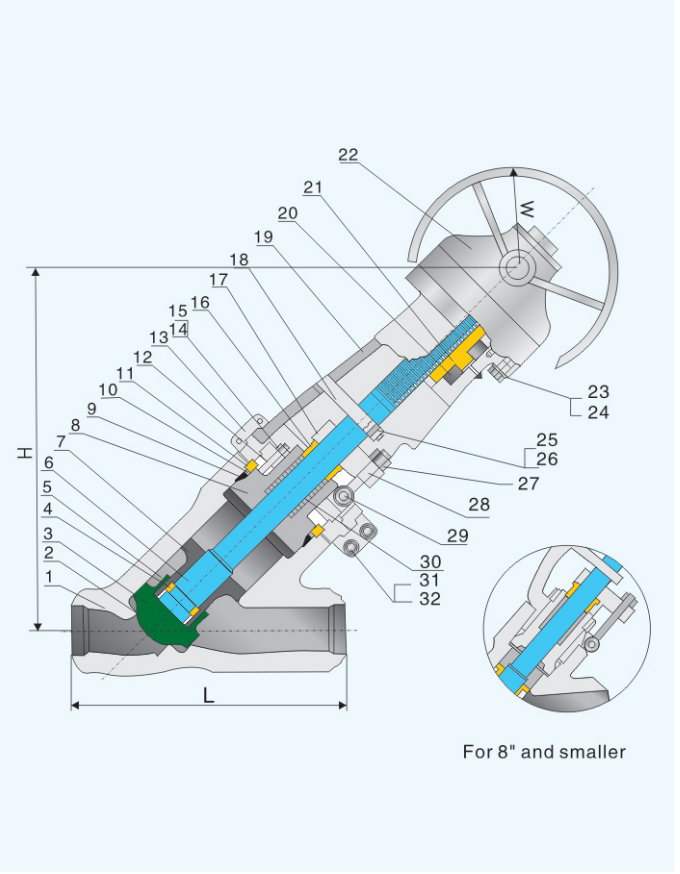


Note: Available LCB, LCC, WC6, C5, WC9, C12, CF8, CF8M,4A, 5A etc for body material. And trim can be customized upon request.

## Dimensions & Weights

| | Valve Size | in.<br>mm | 2<br>50 | 2–1/2<br>65 | 3<br>80 | 4<br>100 | 6<br>150 | 8<br>200 | 10<br>250 | 12<br>300 | 14<br>350 | 16<br>400 |
|---|---|---|---|---|---|---|---|---|---|---|---|---|
| Class 900 | BW(L) | in.<br>mm | 13.3<br>338 | 15.4<br>391 | 17<br>432 | 18.5<br>470 | 20<br>508 | 26<br>660 | 31<br>787 | 38<br>965 | 38<br>965 | 44.5<br>1130 |
| | Open | in.<br>mm | 15<br>380 | 16.5<br>420 | 18.11<br>460 | 23.23<br>590 | 32.28<br>820 | 41.34<br>1050 | 50<br>1270 | 58.27<br>1480 | 61.02<br>1550 | 70.08<br>1780 |
| | W | in.<br>mm | 12.2<br>310 | 12.2<br>310 | 18.11<br>460 | 18.11<br>460 | 18.11<br>460 | 24<br>610 | 24<br>610 | 24<br>610 | 24<br>610 | 24<br>610 |
| | WT(kg) | kg | 78 | 84 | 92 | 131 | 258 | 553 | 992 | 1603 | 1825 | 2579 |
| Class 1500 | BW ( L ) | in.<br>mm | 13.3<br>338 | 15.4<br>391 | 17<br>432 | 18.5<br>470 | 27.75<br>705 | 30<br>762 | 36.25<br>921 | 43<br>1092 | –– | –– |
| | Open | in.<br>mm | 15<br>380 | 16.5<br>420 | 15.16<br>385 | 15.16<br>385 | 18.5<br>470 | 26.06<br>662 | 34.76<br>883 | 58.28<br>1480 | –– | –– |
| | W | in.<br>mm | 12.2<br>310 | 12.2<br>310 | 18.11<br>460 | 18.11<br>460 | 18.11<br>460 | 24<br>610 | 24<br>610 | 24<br>610 | –– | –– |
| | WT(kg) | kg | 83 | 95 | 115 | 148 | 362 | 759 | 1320 | 2062 | –– | –– |
| Class 2500 | BW ( L ) | in.<br>mm | 13.3<br>338 | 15.4<br>391 | 17<br>432 | 18.5<br>470 | 27.75<br>705 | 30<br>762 | 36.25<br>9921 | –– | –– | –– |
| | Open | in.<br>mm | 15<br>380 | 16.5<br>420 | 15.16<br>385 | 16.54<br>420 | 26.89<br>683 | 28.35<br>720 | 35.12<br>892 | –– | –– | –– |
| | W | in.<br>mm | 12.2<br>310 | 18.11<br>460 | 18.11<br>460 | 18.11<br>460 | 18.11<br>460 | 24<br>610 | 24<br>610 | –– | –– | –– |
| | WT(kg) | kg | 93 | 106 | 122 | 163 | 461 | 790 | 1330 | –– | –– | –– |

# Class 150 / 300 / 600 Forged steel flanged globe valve

## Technical specification

1、Design and manufacture: API 602, BS 5352.
2、Consturction feature: B.B OS&Y or WB OS&Y
3、Face to face dimensions: ANSI B16.10.
4、Flanged connection: ANSI B 16.5.
5、Test and inspection: API 598.
6、Available LF2, F5, F9, F11, F22, F304(L), F316(L), aluminium bronze, inconel, monel etc for body material. And trim can be customized upon request.

## Main parts and materials

| No | Parts | Material |
|---|---|---|
| 1 | Body | A105 |
| 2 | Disc | 13Cr |
| 3 | Stem | A182-F6a |
| 4 | Gasket | 304S.S. Jacketed Graphite |
| 5 | Bonnet | A105 |
| 6 | Bolt | A193-B7 |
| 7 | Packing | Graphite |
| 8 | Stem nut | 13Cr |
| 9 | Handwheel | Malleable Iron |
| 10 | Flange | A105 |

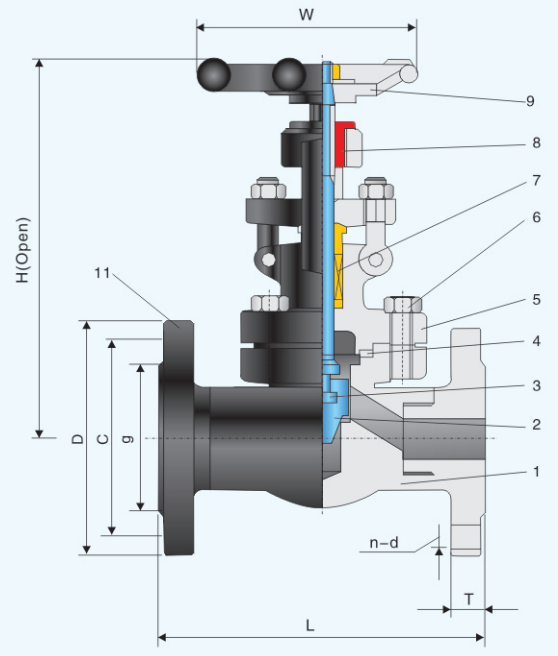


600Lb

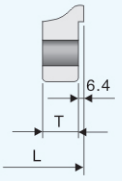


## Dimensions and weights

| DN | | Class | L | D | C | g | T | n-d | H(Open) | | W | | WT(kg) | |
|---|---|---|---|---|---|---|---|---|---|---|---|---|---|---|
| inch | mm | | | | | | | | Reduced Bore | Full Bore | Reduced Bore | Full Bore | Reduced Bore | Full Bore |
| 1/2" | 15 | 150 | 108 | 90 | 60.5 | 35 | 11.5 | 4-16 | 158 | 163 | 100 | 100 | 4.5 | 6.9 |
| | | 300 | 152 | 95 | 66.5 | | 14.5 | 4-16 | | | | | 4.8 | 7.7 |
| | | 600 | 165 | 95 | 66.5 | | 14.5 | 4-16 | | | | | 5.6 | 7.8 |
| 3/4" | 20 | 150 | 117 | 100 | 70 | 43 | 13 | 4-16 | 163 | 193 | 100 | 125 | 6.9 | 9.8 |
| | | 300 | 178 | 115 | 82.5 | | 16 | 4-19 | | | | | 7.7 | 11.3 |
| | | 600 | 190 | 115 | 82.5 | | 16 | 4-19 | | | | | 7.8 | 12.5 |
| 1" | 25 | 150 | 127 | 110 | 79.5 | 51 | 14.5 | 4-16 | 193 | 250 | 125 | 160 | 9.8 | 13.5 |
| | | 300 | 203 | 125 | 89 | | 18 | 4-19 | | | | | 11 | 16.8 |
| | | 600 | 216 | 125 | 89 | | 18 | 4-19 | | | | | 12.5 | 17.5 |
| 1 1/4" | 32 | 150 | 140 | 115 | 89 | 63 | 16 | 4-16 | 250 | 250 | 160 | 160 | 13.5 | 19.5 |
| | | 300 | 216 | 135 | 98.5 | | 19.5 | 4-19 | | | | | 16.8 | 21.2 |
| | | 600 | 229 | 135 | 98.5 | | 21 | 4-19 | | | | | 17 | 23.5 |
| 1 1/2" | 40 | 150 | 165 | 125 | 98.5 | 73 | 18 | 4-16 | 250 | 291 | 160 | 180 | 19.5 | 28.5 |
| | | 300 | 229 | 155 | 114.5 | | 21 | 4-22.5 | | | | | 21.2 | 32.6 |
| | | 600 | 241 | 155 | 114.5 | | 22.5 | 4-22.5 | | | | | 23.5 | 38.5 |
| 2" | 50 | 150 | 203 | 150 | 120.5 | 92 | 19.5 | 4-19 | 291 | 312 | 180 | 200 | 28 | 30.3 |
| | | 300 | 267 | 165 | 127 | | 22.5 | 8-19 | | | | | 32.6 | 35 |
| | | 600 | 292 | 165 | 127 | | 26 | 8-19 | | | | | 38.8 | 42.2 |

## Technical specification

1、Design and manufacturing per API 602, BS 5352.
2、Consturction feature: B.B OS&Y or W.B OS&Y
3、FNPT connection: ANSI B1.20.1
Socket weld connection: ANS B 16.11
4、Test and inspection: API 598.
5、Available LF2, F5, F9, F11, F22, F304(L), F316(L), aluminium bronze, inconel, monel etc for body material. And trim can be customized upon request.

## Main parts and materials

| No | Parts | Material |
|---|---|---|
| 1 | Body | A105 |
| 2 | Disc | 13Cr |
| 3 | Stem | A182–F6a |
| 4 | Gasket | 304S.S. Jacketed Graphite |
| 5 | Bonnet | A105 |
| 6 | Bolt | A193–B7 |
| 7 | Packing | Graphite |
| 8 | Stem nut | 13Cr |
| 9 | Handwheel | Malleable Iron |

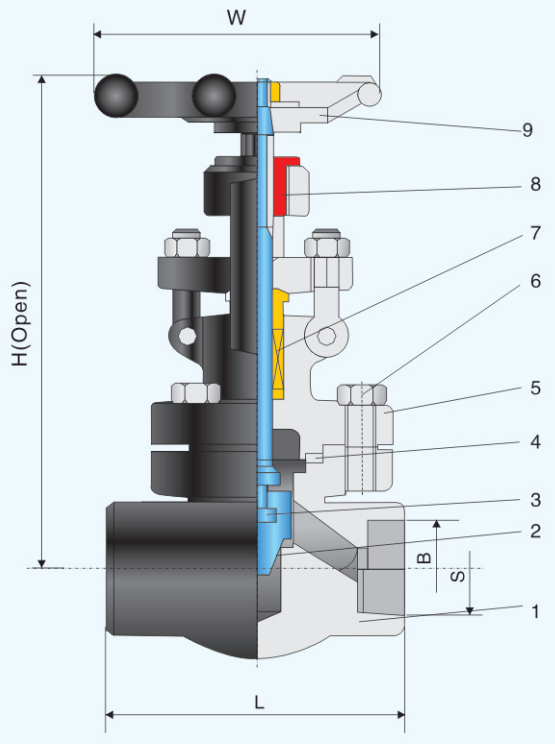


## Dimensions and weights

| DN | | | | L | B(SW) | | | | S(Screwed) | | | | H (Open) | W | WT(kg) | |
|---|---|---|---|---|---|---|---|---|---|---|---|---|---|---|---|---|
| inch | | mm | | | ANSI | | JIS | | ANSI60° | | ISO、BS、JIS50° | | | | | |
| Reduced Bore | Full Bore | Reduced Bore | Full Bore | | Reduced Bore | Full Bore | Reduced Bore | Full Bore | Reduced Bore | Full Bore | Reduced Bore | Full Bore | | | Reduced Bore | Full Bore |
| 1/2" | -- | 15 | -- | 80 | 21.8 | -- | 22.2 | -- | 1/2" | -- | 1/2" | -- | 158 | 100 | 1.9 | -- |
| 3/4" | 1/2" | 20 | 15 | 92 | 27.1 | 21.8 | 27.7 | 22.2 | 3/4" | 1/2" | 3/4" | 1/2" | 192 | 100 | 2.1 | 2.3 |
| 1" | 3/4" | 25 | 20 | 111 | 33.8 | 27.1 | 34.5 | 27.7 | 1" | 3/4" | 1" | 3/4" | 252 | 125 | 3.3 | 3.6 |
| 1 1/4" | 1" | 32 | 25 | 120 | 42.6 | 33.8 | 43.2 | 34.5 | 1 1/4" | 1" | 1 1/4" | 1" | 252 | 160 | 7.5 | 7.8 |
| 1 1/2" | 1 1/4" | 40 | 32 | 152 | 48.7 | 42.6 | 49.1 | 43.2 | 1 1/2" | 1 1/4" | 1 1/2" | 1 1/4" | 289 | 160 | 7.5 | 8.2 |
| 2" | 1 1/2" | 50 | 40 | 172 | 61.1 | 48.7 | 61.1 | 49.1 | 2" | 1 1/2" | 2" | 1 1/2" | 330 | 180 | 11.4 | 12 |
| -- | 2" | -- | 50 | 200 | -- | 61.1 | -- | 61.1 | -- | 2" | -- | 2" | 370 | 240 | -- | 15 |

# Class 900 / 1500 / 2500 Forged steel globe valve

## Technical specification

1、Design and manufacture: API 602, BS 5352.
2、Consturction feature: PSB OS&Y or WB OS&Y
3、FNPT connection: ANSI B1.20.1
Socket weld connection: ANS B 16.11
4、Test and inspection: API 598.
5、Available LF2, F5, F9, F11, F22, F304(L), F316(L), aluminium bronze, inconel, monel etc for body material. And trim can be customized upon request.

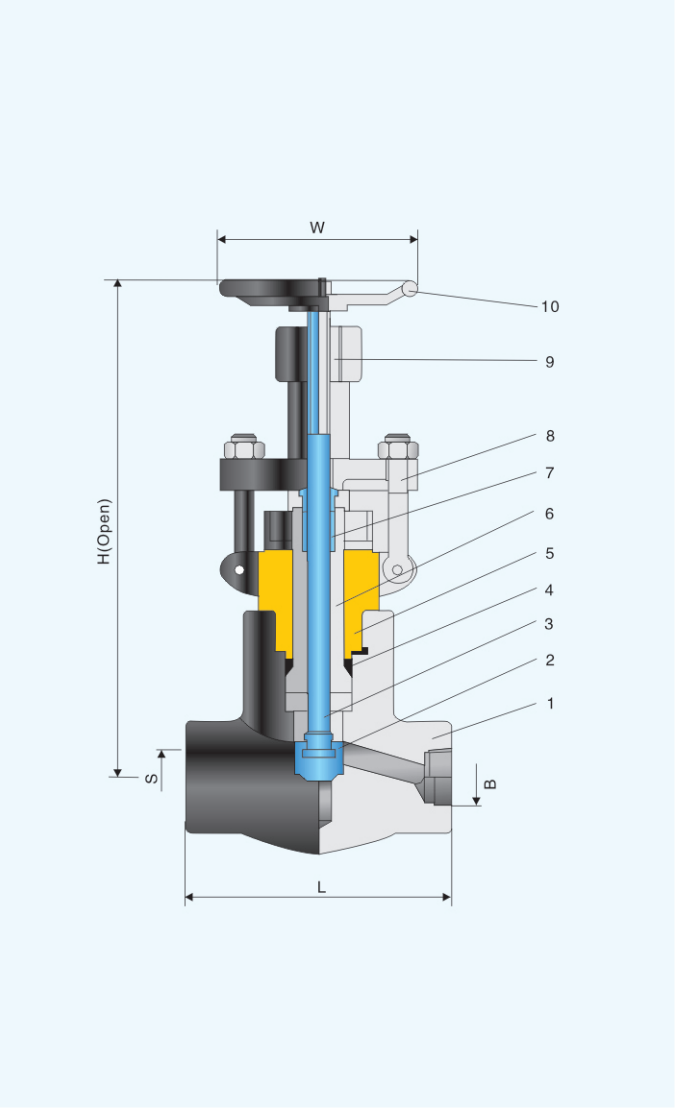


## Main parts and materials

| No | Parts | Material |
|---|---|---|
| 1 | Body | A105 |
| 2 | Disc | 13Cr |
| 3 | Stem | A182–F6a |
| 4 | Sealed ring | 304 |
| 5 | Yoke | A105 |
| 6 | Bonnet | A105 |
| 7 | Packing | Graphite |
| 8 | Bolt | A193–B7 |
| 9 | Stem nut | 13Cr |
| 10 | Handwheel | Malleable Iron |

## Dimensions and weights

| DN | | L | | B(SW) | | S(Screwed) | | | H (Open) | W | WT(kg) | |
|---|---|---|---|---|---|---|---|---|---|---|---|---|
| inch | mm | Class900 Class1500 | Class2500 | ANSI | JIS | ANSI APT60° | ISO、BS RC60° | JIS PT50° | | | Class900 Class1500 | Class2500 |
| 1/2" | 15 | 140 | 186 | 21.8 | 22.2 | 1/2" | | | 333 | 125 | 10.1 | 10.8 |
| 3/4" | 20 | 140 | 186 | 27.1 | 27.7 | 3/4" | | | 333 | 125 | 10.8 | 11.6 |
| 1" | 25 | 140 | 186 | 33.8 | 34.5 | 1" | | | 333 | 160 | 11.2 | 12.3 |
| 1 1/4" | 32 | 178 | 232 | 42.6 | 43.2 | 1 1/4" | | | 408 | 160 | 21.0 | 28.0 |
| 1 1/2" | 40 | 178 | 232 | 48.7 | 49.1 | 1 1/2" | | | 408 | 180 | 19.6 | 26.4 |
| 2" | 50 | 216 | 279 | 61.1 | 61.1 | 2" | | | 524 | 200 | 40.4 | 43.8 |

## Technical specification

1、Design and manufacture: API 602, BS 5352.
2、Face to face dimensions: ANSI B16.10.
3、Flanged connection: ANSI B16.5.
4、Test and inspection: API 598.
5、Available LF2, F5, F9, F11, F22, F304(L), F316(L), aluminium bronze, inconel, monel etc for body material. And trim can be customized upon request.

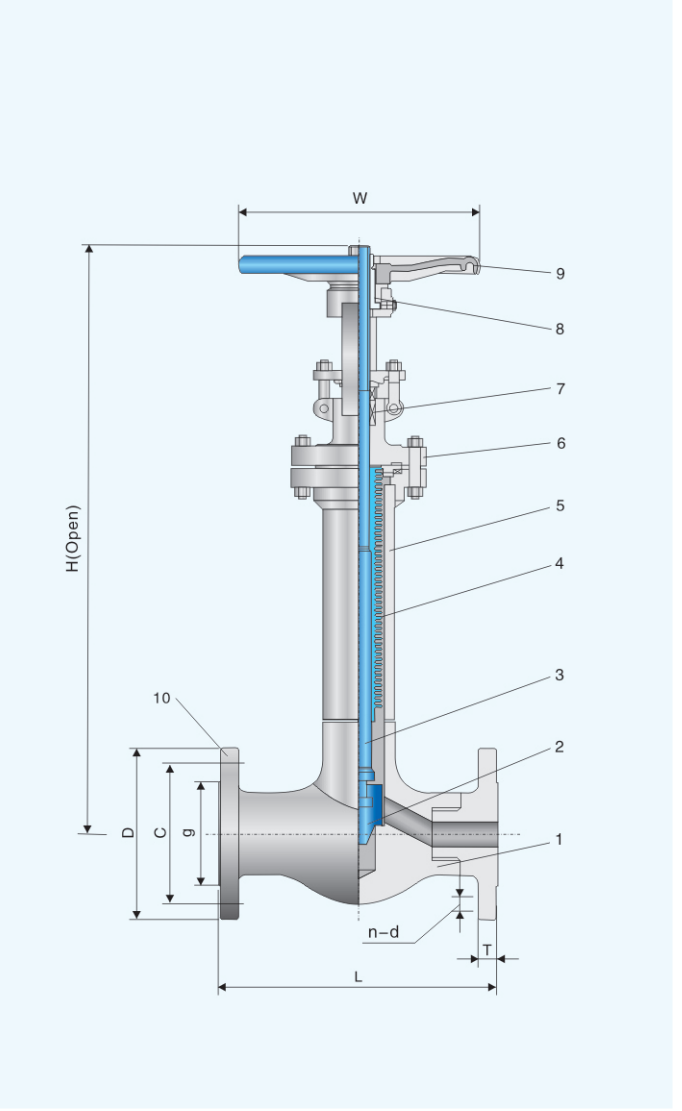


## Main parts and materials

| No | Parts | Material |
|---|---|---|
| 1 | Body | A105+STL |
| 2 | Disc | 13Cr+STL |
| 3 | Stem | A182–F6a |
| 4 | Bellow | 304L |
| 5 | Bonnet | A105 |
| 6 | Yoke | A105 |
| 7 | Packing | Graphite |
| 8 | Stem nut | copper alloy |
| 9 | Handwheel | Malleable Iron |
| 10 | Flange | A105 |

## Dimensions and weights

| Class | DN | | L | D | C | g | T | n–d | H(Open) | W | WT(kg) |
|---|---|---|---|---|---|---|---|---|---|---|---|
| | inch | mm | | | | | | | | | |
| Class150 | 1/2" | 15 | 108 | 90 | 60.5 | 35 | 11.5 | 4–16 | 420 | 100 | 8 |
| | 3/4" | 20 | 117 | 100 | 70 | 43 | 13 | 4–16 | 445 | 125 | 11 |
| | 1" | 25 | 127 | 110 | 79.5 | 51 | 14.5 | 4–16 | 486 | 160 | 14 |
| | 1 1/2" | 40 | 165 | 125 | 98.5 | 73 | 18 | 4–16 | 590 | 180 | 16 |
| | 2" | 50 | 203 | 150 | 120.5 | 92 | 19.5 | 4–19 | 615 | 200 | 20 |
| Class300 | 1/2" | 15 | 152 | 95 | 66.5 | 35 | 14.5 | 4–16 | 428 | 100 | 9 |
| | 3/4" | 20 | 178 | 115 | 82.5 | 43 | 16 | 4–19 | 452 | 125 | 12 |
| | 1" | 25 | 203 | 125 | 89 | 51 | 18 | 4–19 | 495 | 160 | 15 |
| | 1 1/2" | 40 | 229 | 155 | 114.5 | 73 | 21 | 4–22.5 | 605 | 180 | 19 |
| | 2" | 50 | 267 | 165 | 127 | 92 | 22.5 | 8–19 | 630 | 200 | 23 |

## Technical specification

1、Design and manufacture: API 602, BS 5352.
2、Socket Weld connection: ANSI B16.11
3、Test and inspection: API 598.
4、Available LF2, F5, F9, F11, F22, F304(L), F316(L), aluminium bronze, inconel, monel etc for body material. And trim can be customized upon request.

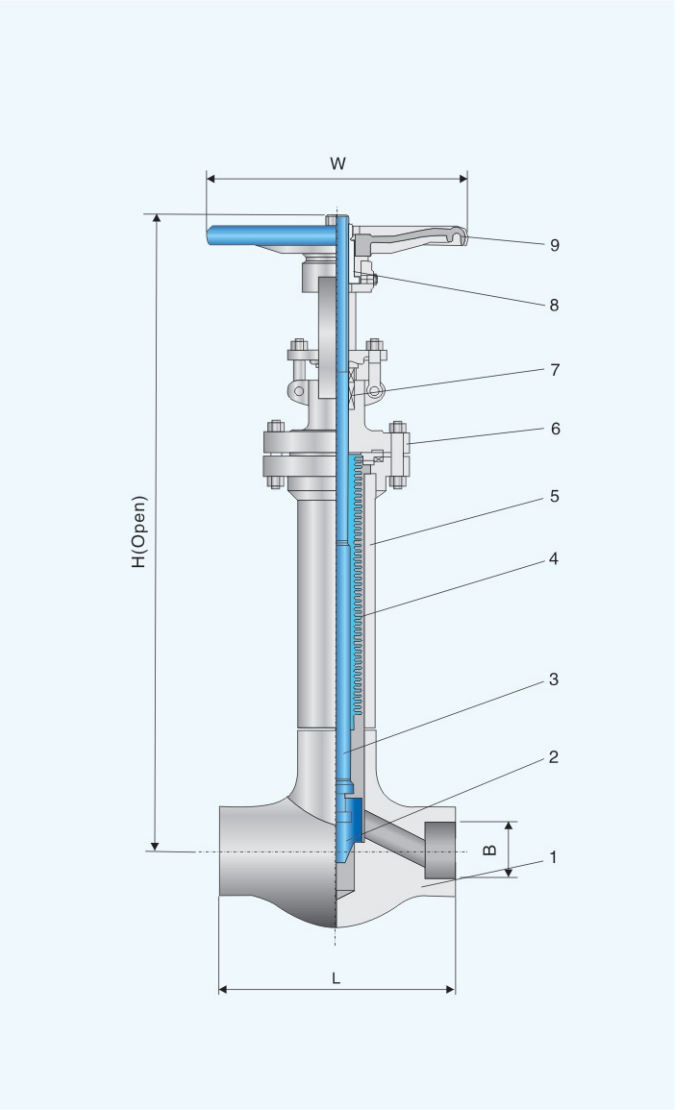


## Main parts and materials

| No | Parts | Material |
|---|---|---|
| 1 | Body | A105+STL |
| 2 | Disc | 13Cr+STL |
| 3 | Stem | A182–F6a |
| 4 | Bellow | 304L |
| 5 | Bonnet | A105 |
| 6 | Yoke | A105 |
| 7 | Packing | Graphite |
| 8 | Stem nut | Copper alloy |
| 9 | Handwheel | Malleable Iron |

## Dimensions and weights

| DN | | L | B | H(Open) | W | WT(kg) |
|---|---|---|---|---|---|---|
| inch | mm | | | | | |
| 1/2" | 15 | 92 | 21.8 | 420 | 100 | 8 |
| 3/4" | 20 | 111 | 27.1 | 445 | 125 | 11 |
| 1" | 25 | 120 | 33.8 | 486 | 160 | 14 |
| 1 1/2" | 40 | 172 | 48.7 | 590 | 180 | 16 |
| 2" | 50 | 200 | 61.1 | 615 | 200 | 16 |

## Technical specification

1、Design and manufacture: API 602, BS 5352.
2、NPT connection: ANSI B1.20.1
3、Test and inspection: API 598.
4、Available LF2, F5, F9, F11, F22, F304(L), F316(L), aluminium bronze, inconel, monel etc for body material. And trim can be customized upon request.

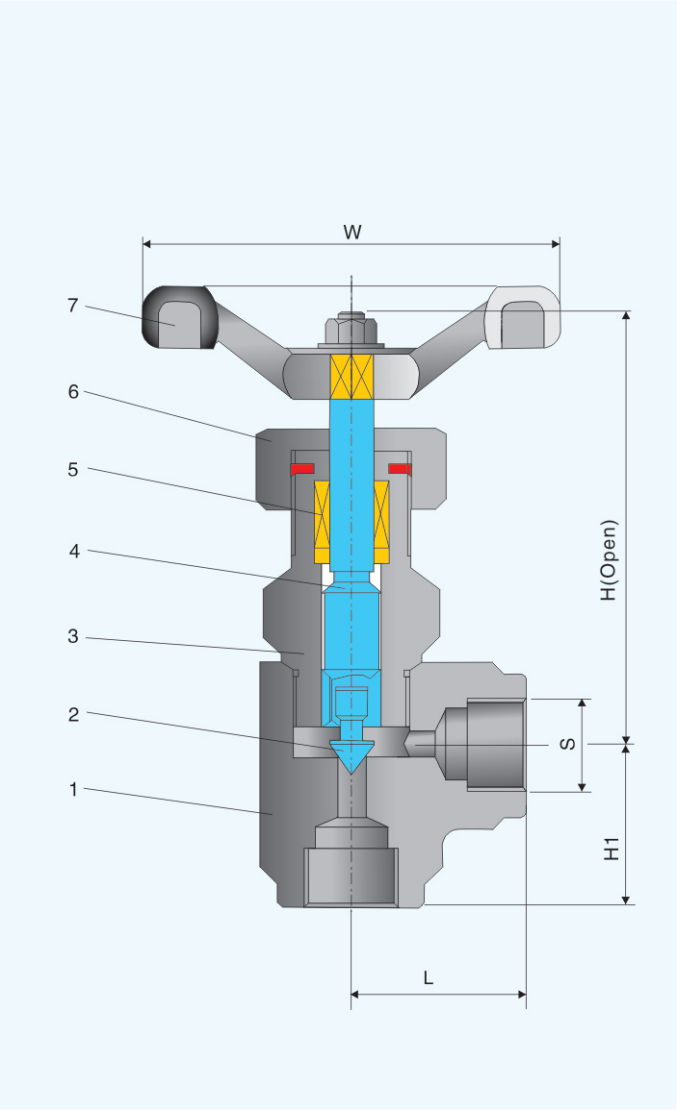


## Main parts and materials

| No | Parts | Material |
|---|---|---|
| 1 | Body | A105 |
| 2 | Disc | 13Cr |
| 3 | Bonnet | A105 |
| 4 | Stem | A182-F6a |
| 5 | Packing | Graphite |
| 6 | Impact nut | 13Cr |
| 7 | Handwheel | Malleable Iron |

## Dimensions and weights

| DN | | L | S(NPT) | H1 | H(Open) | W | WT(kg) |
|---|---|---|---|---|---|---|---|
| inch | mm | | | | | | |
| 1/2" | 6 | 30 | 6 | 30 | 82 | 65 | 0. 65 |
| 3/8" | 10 | 30 | 10 | 32 | 82 | 65 | 0.59 |
| 1/2" | 15 | 30 | 15 | 35 | 82 | 65 | 0.54 |
| 3/4" | 20 | 40 | 20 | 40 | 94 | 80 | 1.2 |
| 1" | 25 | 40 | 25 | 45 | 94 | 80 | 1.1 |

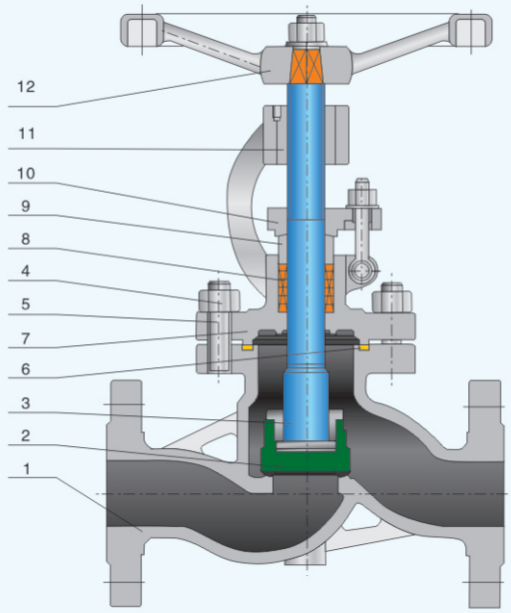


## Standards

Design and Manufacture: BS 1873, BS EN 558-1
Face to Face Dimensions: DIN3202, EN 1092-1
Flange Ends Dimensions: DIN2543,
DIN2544, DIN2545, DIN2546,
DIN2547, DIN2548
Test & Inspect: DIN 3230

## Parts and material list

| Part Name | | Material | | | | |
|---|---|---|---|---|---|---|
| | | Trim 1 | Trim 8 | Trim 5 | | |
| 1 | Body | DIN 17245 GS-C25+CR13 | DIN 17245 GS-C25+STL | DIN 17245 GS-C25+STL | DIN 17445 1.4308 | DIN 17445 1.4408 |
| 2 | Disc | DIN 17245 GS-C25+CR13 | DIN 17245 GS-C25+CR13 | DIN 17245 GS-C25+STL | DIN 17445 1.4308 | DIN 17445 1.4408 |
| 7 | Bonnet | DIN 17245 GS-C25+CR13 | DIN 17245 GS-C25+CR13 | DIN 17245 GS-C25+CR13 | DIN 17445 1.4308 | DIN 17445 1.4408 |
| 9 | Gland | ASTM A182 F6a | | | ASTM A182 F304 | ASTM A182 F316 |
| 10 | Gland Flange | DIN 17245 GS-C25 | | | DIN 17445 1.4308 | DIN 17445 1.4408 |
| 3 | Stem | ASTM A182 F6a | | | ASTM A182 F304 | ASTM A182 F304 |
| 4 | Nut | A194 2H | | | A194 8 | A194 8 |
| 5 | Bolt | A193 B7 | | | A193 B8 | A193 B8 |
| 6 | Gasket | SS Spiral Wound W/graphite,or SS Spiral Wound W/PTFE,or Reinforced PTFE | | | | |
| 8 | Packing | Braided Graphite or reformed Graphite Ring or PTFE | | | | |
| 11 | Stem Nut | Copper alloy or A439 D2 | | | | |
| 12 | Hand Wheel | Ductile iron or Carbon steel | | | | |

Noted: The chart above only lists out some common composition of steel globe valve. We may provide other different parts material composition according to the customer's request or the actual valve working conditlon

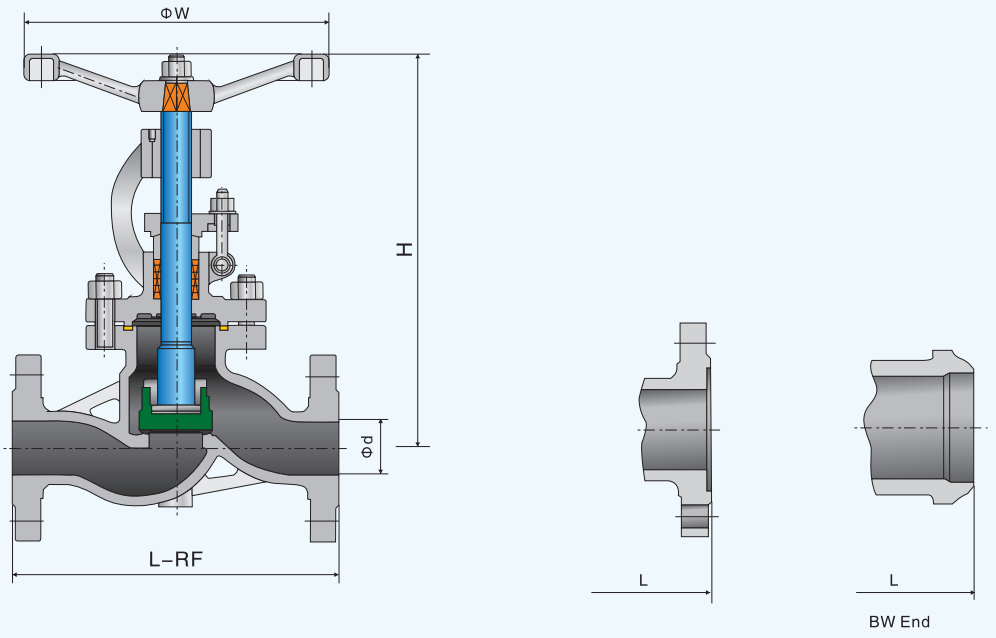


## Dimensions

| PN16(DIN 3202-F1) | | | | | | | | | | | | | | | | | | | |
|---|---|---|---|---|---|---|---|---|---|---|---|---|---|---|---|---|---|---|---|
| DN | mm | 15 | 20 | 25 | 32 | 40 | 50 | 65 | 80 | 100 | 125 | 150 | 200 | 250 | 300 | 350 | 400 | 450 | 500 |
| L-RF | mm | 130 | 150 | 160 | 180 | 200 | 230 | 290 | 310 | 350 | 400 | 480 | 600 | 730 | 850 | 980 | 1100 | 1200 | 1250 |
| L-BW | mm | 130 | 150 | 160 | 180 | 200 | 230 | 290 | 310 | 350 | 400 | 480 | 600 | 730 | 850 | 980 | 1100 | 1200 | 1250 |
| H | mm | 190 | 210 | 235 | 235 | 285 | 310 | 340 | 370 | 420 | 480 | 510 | 610 | 770 | 890 | – | – | – | – |
| W | mm | 120 | 140 | 160 | 180 | 200 | 200 | 250 | 280 | 300 | 360 | 400 | 400 | 450 | 500 | – | – | – | – |
| PN25(DIN 3202-F1) | | | | | | | | | | | | | | | | | | | |
| DN | mm | 15 | 20 | 25 | 32 | 40 | 50 | 65 | 80 | 100 | 125 | 150 | 200 | 250 | 300 | 350 | 400 | – | – |
| L-RF | mm | 130 | 150 | 160 | 180 | 200 | 230 | 290 | 310 | 350 | 400 | 480 | 600 | 730 | 850 | 980 | 1100 | – | – |
| L-BW | mm | 130 | 150 | 160 | 180 | 200 | 230 | 290 | 310 | 350 | 400 | 480 | 600 | 730 | 850 | 980 | 1100 | – | – |
| H | mm | 190 | 210 | 235 | 235 | 285 | 310 | 340 | 370 | 420 | 480 | 535 | 660 | 790 | 940 | 1010 | 1125 | – | – |
| W | mm | 120 | 140 | 160 | 180 | 200 | 200 | 250 | 280 | 300 | 360 | 400 | 400 | 450 | 500 | – | – | – | – |
| PN40(DIN 3202-F1) | | | | | | | | | | | | | | | | | | | |
| DN | mm | 15 | 20 | 25 | 32 | 40 | 50 | 65 | 80 | 100 | 125 | 150 | 200 | 250 | 300 | 350 | 400 | – | – |
| L-RF | mm | 130 | 150 | 160 | 180 | 200 | 230 | 290 | 310 | 350 | 400 | 480 | 600 | 730 | 850 | 980 | 1100 | – | – |
| L-BW | mm | 130 | 150 | 160 | 180 | 200 | 230 | 290 | 310 | 350 | 400 | 480 | 600 | 730 | 850 | 980 | 1100 | – | – |
| H | mm | 190 | 210 | 235 | 235 | 285 | 310 | 340 | 370 | 420 | 480 | 560 | 725 | 815 | 945 | 1015 | 1150 | – | – |
| W | mm | 120 | 140 | 160 | 180 | 200 | 200 | 250 | 280 | 300 | 360 | 500 | 500 | – | – | – | – | – | – |
| PN63(DIN 3202-F2) | | | | | | | | | | | | | | | | | | | |
| DN | mm | 15 | 20 | 25 | 32 | 40 | 50 | 65 | 80 | 100 | 125 | 150 | 200 | 250 | 300 | – | – | – | – |
| L-RF | mm | 210 | 230 | 230 | 260 | 260 | 300 | 340 | 380 | 430 | 500 | 550 | 650 | 775 | 900 | – | – | – | – |
| L-BW | mm | 210 | 230 | 230 | 260 | 260 | 300 | 340 | 380 | 430 | 500 | 550 | 650 | 775 | 900 | – | – | – | – |
| W | mm | 210 | 248 | 275 | 355 | 395 | 450 | 494 | 531 | 588 | 650 | 715 | 813 | – | – | – | – | – | – |
| PN100(DIN 3202-F2) | | | | | | | | | | | | | | | | | | | |
| DN | mm | 15 | 20 | 25 | 32 | 40 | 50 | 65 | 80 | 100 | 125 | 150 | 200 | 250 | 300 | – | – | – | – |
| L-RF | mm | 210 | 230 | 230 | 260 | 260 | 300 | 340 | 380 | 430 | 500 | 550 | 650 | 775 | 900 | – | – | – | – |
| L-BW | mm | 210 | 230 | 230 | 260 | 260 | 300 | 340 | 380 | 430 | 500 | 550 | 650 | 775 | 900 | – | – | – | – |
| W | mm | 210 | 248 | 275 | 355 | 395 | 450 | 494 | 531 | 588 | 650 | 715 | 813 | – | – | – | – | – | – |

Noted: We may provide other different actuators according to the customer's request,such as pneumatic,electic,hydraulic actuators,th e details of them according to the actual valve working conditlon.

Noted: The face to face demension of BW-end-valve is the same as that of flanged-end-valve.

# DIN Bellows seal globe valve

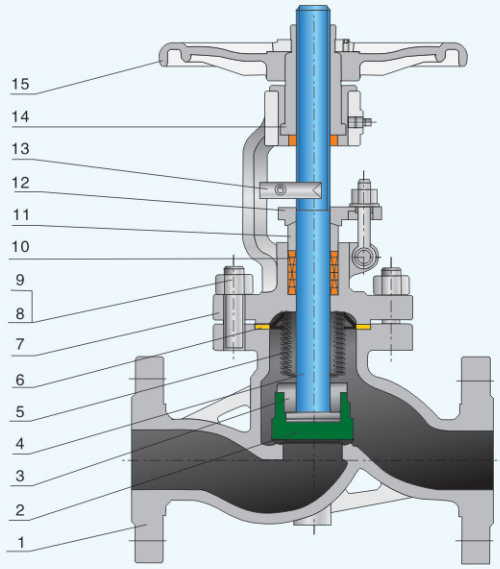


## Standards

Design and Manufacture: DIN 3356,BS 1873
Face to Face Dimensions: DIN3202,EN 558-1
Flange Ends Dimensions: DIN2543-2545,EN 1092-1
Test & Inspect: DIN 3230,BS EN 12569

## Structure Feature

1.Double seal, more reliable performance,
2.Stem lift position indication, more intuitive,
3.Small flow reJIStance, low pressure drop.

## Parts and material list

| Part Name | | Material | | | | |
|---|---|---|---|---|---|---|
| 1 | Body | DIN 17245 GS-C25+CR13 | DIN 17245 GS-C25+STL | DIN 17245 GS-C25+STL | DIN 17445 1.4308 | DIN 17445 1.4408 |
| 2 | Disc | DIN 17245 GS-C25+CR13 | DIN 17245 GS-C25+CR13 | DIN 17245 GS-C25+STL | DIN 17445 1.4308 | DIN 17445 1.4408 |
| 7 | Bonnet | DIN 17245 GS-C25 | DIN 17245 GS-C25 | DIN 17245 GS-C25 | DIN 17445 1.4308 | DIN 17445 1.4408 |
| 3 | Disc Cover | ASTM A182 F6a | | | ASTM A182 F304 | ASTM A182 F316 |
| 4 | Stem | ASTM A182 F6a | | | ASTM A182 F304 | ASTM A182 F316 |
| 5 | Bellows Seal | SS304 | | | SS304 | SS316 |
| 8 | Bolt | ASTM A193 B7 | | | ASTM A194 8 | ASTM A194 8 |
| 9 | Nut | ASTM A194 2H | | | ASTM A193 B8 | ASTM A193 B8 |
| 11 | Gland | ASTM A182 F6a | | | ASTM A182 F304 | ASTM A182 F316 |
| 12 | Gland Flange | DIN 17245 GS-C25 | | | DIN 17445 1.4308 | DIN 17445 1.4408 |
| 13 | Guide Block | DIN 17245 GS-C25 | | | DIN 17445 1.4308 | DIN 17445 1.4408 |
| 6 | Gasket | Flexibe Graphite+SS,TFE,or Reinforced PTFE | | | | |
| 10 | Packing | Braided Craphite or reformed Graphite Ring or PTFE | | | | |
| 14 | Stem Nut | Copper Alloy or A439 D2 | | | | |
| 15 | Hand wheel | Ductile Iron or Carbon steel | | | | |

Noted: Conection flange of series valve may be manufactured by customer's requirement.

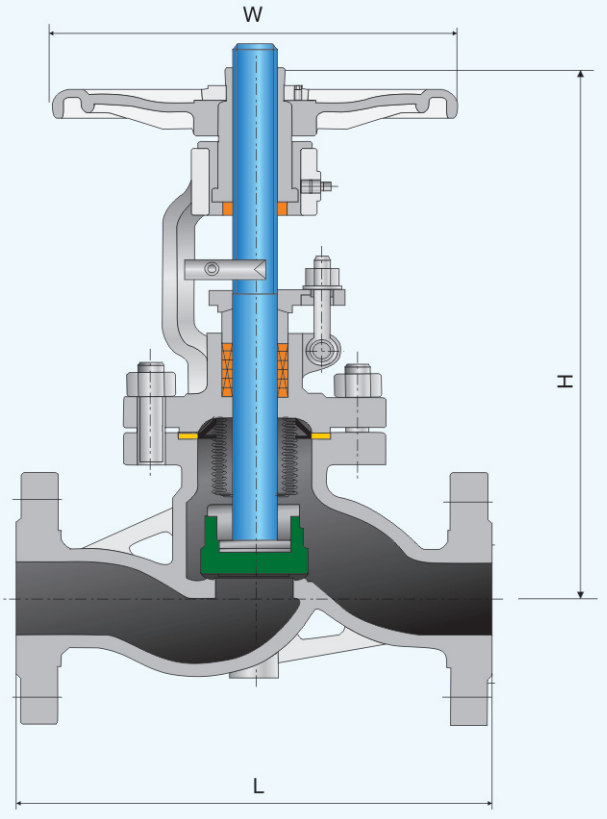


## Dimensions

| PN16(DIN 3202-F1) | | | | | | | | | | | | | | | |
|---|---|---|---|---|---|---|---|---|---|---|---|---|---|---|---|
| DN | 15 | 20 | 25 | 32 | 40 | 50 | 65 | 80 | 100 | 125 | 150 | 200 | 250 | 300 | 350 |
| L | 130 | 150 | 160 | 180 | 200 | 230 | 290 | 310 | 350 | 400 | 480 | 600 | 730 | 850 | 980 |
| H | 195 | 200 | 220 | 225 | 235 | 250 | 260 | 265 | 370 | 400 | 515 | 550 | 600 | 630 | 680 |
| W | 120 | 120 | 140 | 160 | 160 | 180 | 200 | 220 | 250 | 300 | 350 | 400 | 450 | 500 | 500 |
| PN25(DIN 3202-F1) | | | | | | | | | | | | | | | |
| DN | 15 | 20 | 25 | 32 | 40 | 50 | 65 | 80 | 100 | 125 | 150 | 200 | 250 | 300 | 350 |
| L | 130 | 150 | 160 | 180 | 200 | 230 | 290 | 310 | 350 | 400 | 480 | 600 | 730 | 850 | 980 |
| H | 195 | 200 | 220 | 225 | 235 | 250 | 260 | 265 | 370 | 400 | 515 | 550 | 600 | 630 | 680 |
| W | 120 | 140 | 140 | 160 | 160 | 180 | 200 | 220 | 250 | 300 | 350 | 400 | 450 | 500 | 500 |
| PN40(DIN 3202-F1) | | | | | | | | | | | | | | | |
| DN | 15 | 20 | 25 | 32 | 40 | 50 | 65 | 80 | 100 | 125 | 150 | 200 | 250 | 300 | 350 |
| L-RF | 130 | 150 | 160 | 180 | 200 | 230 | 290 | 310 | 350 | 400 | 480 | 600 | 730 | 850 | 980 |
| H | 195 | 200 | 220 | 225 | 235 | 250 | 260 | 265 | 370 | 400 | 515 | 550 | 600 | 630 | 680 |
| W | 120 | 140 | 140 | 160 | 160 | 180 | 200 | 220 | 250 | 300 | 350 | 400 | 450 | 500 | 500 |